HIGHPOINT ANCHORED FOLDING ROOM DIVIDER

Assembly Instructions

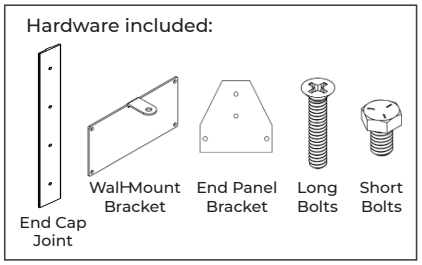

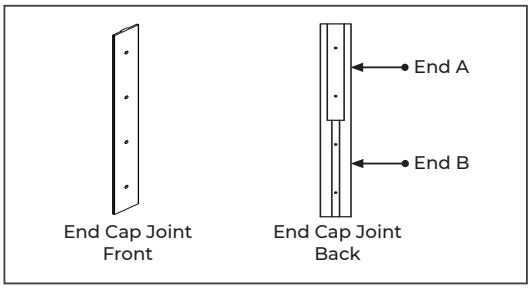

Step 1:

Remove the long bolt from the side of each of the top panels.* Slide first end cap joint into each top panel, leading with end A, front side facing up. Align holes and insert (2) long bolts. Repeat for each panel.

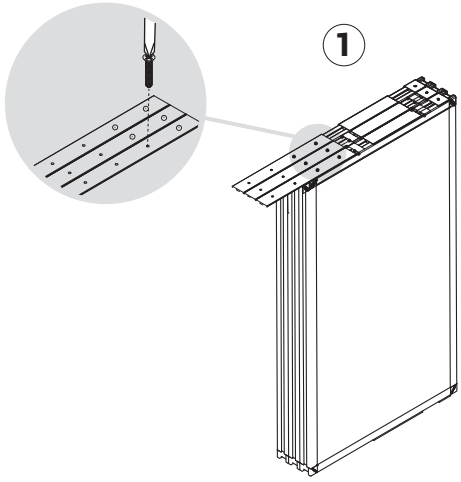

Step 2:

Remove a long bolt from each bottom panel. Align top and bottom panels, positioning the end cap joint so the holes align.* Insert (2) long bolts per end B of the end cap joint on the top panel.

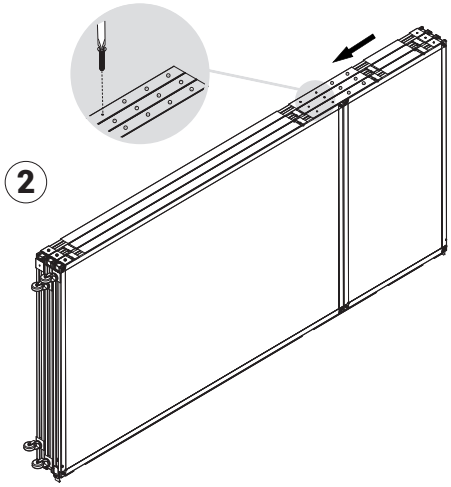

Step 3:

Attach wall-mount hinges using bolts attached to the wall-mount bracket.

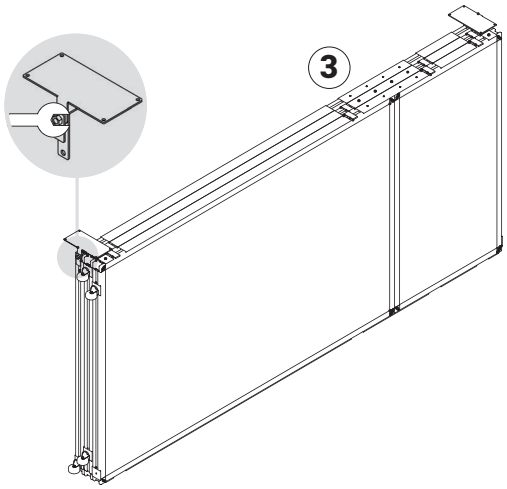

Step 4:
Gently place end panel flat on the ground and attach an end panel plate loosely to the top and bottom using (2) short bolts per plate.

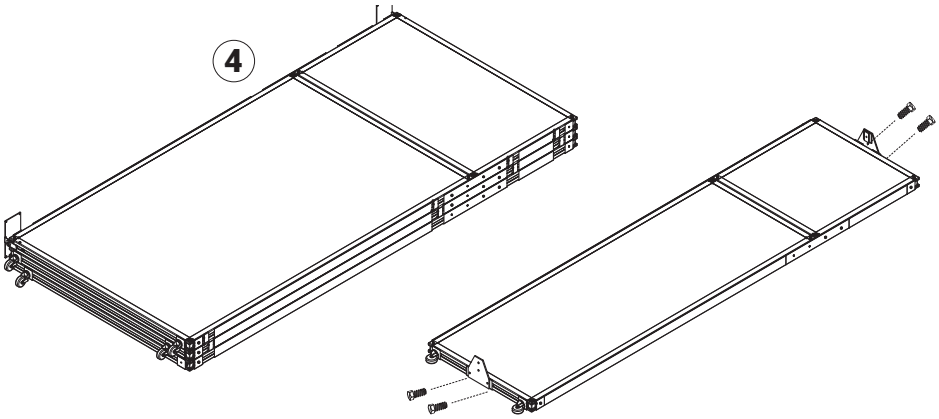

Step 5:
Attach end panel and plates to the main panels using (1) more short bolt for each plate.

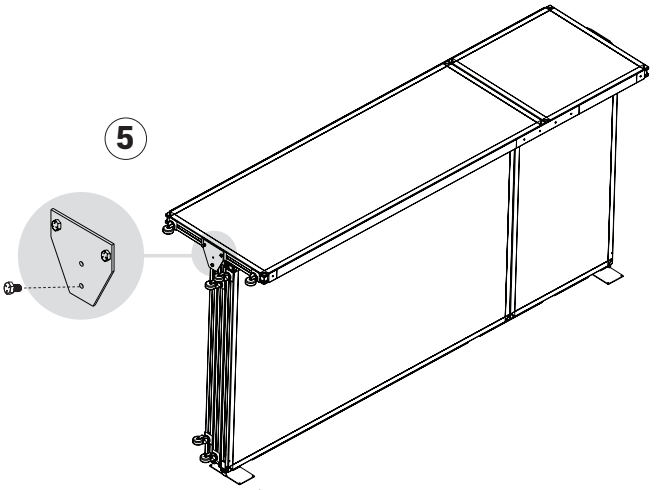

Step 6:
Gently lift partition onto its base and screw wall plates to wall with (4) fasteners each.*

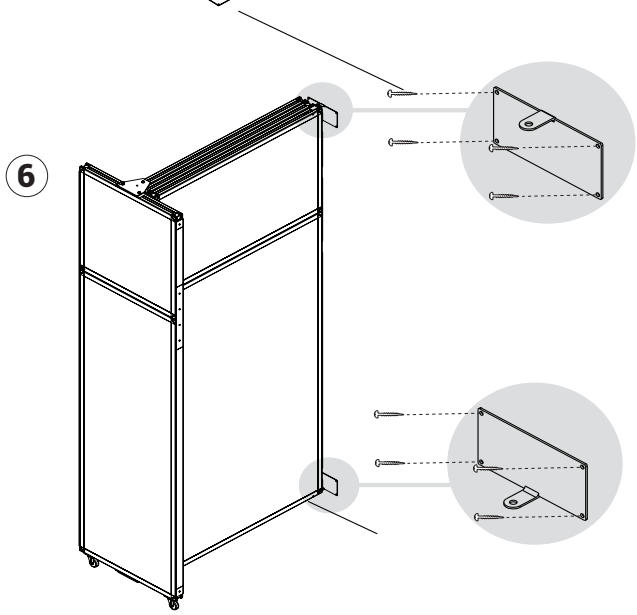

*Due to different wall types, fasteners are not included with wall plates. Please evaluate wall material and consult local hardware professional before installing wall plates to wall for a secure installation.