Smith System®
Specification Sheet

Numbers™ Seating

Numbers Stack Chair

MODEL#: 22845

Model # Shown: 22849

OVERVIEW

Numbers chair is a winning answer for creating inspirational classrooms around the world. The chair delivers impressive benefits that add up for students and schools – great value, quality and comfort in a compact, sleek design that appeals to all ages. This chair answers the need for value-driven, high-quality classroom solutions with international design appeal. Numbers' compact, sleek look suits all ages, and the product specifications comply with BIFMA, EN, & GB standards for durability, performance and sizing. (View Height Guide)

MATERIALS

The blow molded shell is polypropylene material that features a waterfall front seat pan to allow for comfort and 360-degree movement. The shell's top surface includes a subtle woven pattern that allows for better airflow. Also, featured are two handles: 1) low, through hole to easily move, stack or clean the chair and 2) a curled seatback ledge to grip and lift. The taller continuous seatback adds upper back support, with a rounded top edge that can double as an armrest. Cover plate on underside of shell is made of polypropylene with integrated TPE skids. The TPE skids are soft to better protect surfaces when stacked.

The frame is constructed of a strong 22mm x 14-gauge steel tube frame with a 14-gauge CRS mounting plate. Frame conceals into shell cavity for a slim appearance. All frames feature a durable platinum painted finish. Consists of nylon glides with an optional felt tip.

SHELL COLOR OPTIONS

APPLE, BLACK, CERULEAN, CHARCOAL, NAVY, PERSIAN BLUE

ADDITIONAL LEAD TIME SHELL COLOR OPTIONS

BLUEBERRY, BURGUNDY, FOREST GREEN, ORANGE, PLATINUM, PURPLE, RED, YELLOW

FRAME COLOR

PLATINUM

GLIDE OPTIONS

Nylon glide is standard
Felt glide option: add "F" to follow model#
(Set of 4 installed - upcharge for felt glide)
View Glide Guide

DIMENSIONS

Model	Description	A	B	C	D	E	F	G
22845	Numbers 10" Stack Chair (size 1)	21.4	12.4	16.4	12.1	10	15.1	13.1

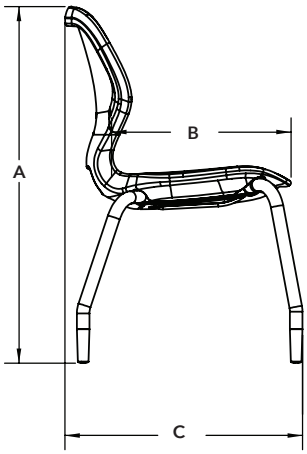

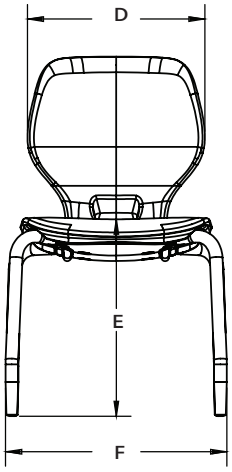

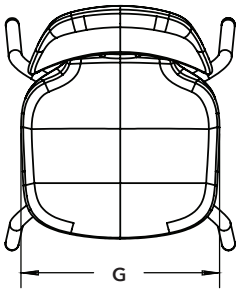

Smith System®
Specification Sheet

Numbers™ Seating

Numbers Stack Chair

MODEL#: 22846

Model # Shown: 22849

OVERVIEW

Numbers chair is a winning answer for creating inspirational classrooms around the world. The chair delivers impressive benefits that add up for students and schools – great value, quality and comfort in a compact, sleek design that appeals to all ages. This chair answers the need for value-driven, high-quality classroom solutions with international design appeal. Numbers' compact, sleek look suits all ages, and the product specifications comply with BIFMA, EN, & GB standards for durability, performance and sizing. (View Height Guide)

MATERIALS

The blow molded shell is polypropylene material that features a waterfall front seat pan to allow for comfort and 360-degree movement. The shell's top surface includes a subtle woven pattern that allows for better airflow. Also, featured are two handles: 1) low, through hole to easily move, stack or clean the chair and 2) a curled seatback ledge to grip and lift. The taller continuous seatback adds upper back support, with a rounded top edge that can double as an armrest. Cover plate on underside of shell is made of polypropylene with integrated TPE skids. The TPE skids are soft to better protect surfaces when stacked.

The frame is constructed of a strong 22mm x 14-gauge steel tube frame with a 14-gauge CRS mounting plate. Frame conceals into shell cavity for a slim appearance. All frames feature a durable platinum painted finish. Consists of nylon glides with an optional felt tip.

SHELL COLOR OPTIONS

APPLE, BLACK, CERULEAN, CHARCOAL, NAVY, PERSIAN BLUE

ADDITIONAL LEAD TIME SHELL COLOR OPTIONS

BLUEBERRY, BURGUNDY, FOREST GREEN, ORANGE, PLATINUM, PURPLE, RED, YELLOW

FRAME COLOR

PLATINUM

GLIDE OPTIONS

Nylon glide is standard
Felt glide option: add "F" to follow model#
(Set of 4 installed - upcharge for felt glide)
View Glide Guide

DIMENSIONS

Model	Description	A	B	C	D	E	F	G
22846	Numbers 12" Stack Chair (size 2)	23.3	12.4	16.4	12.1	12.1	15.1	13.1

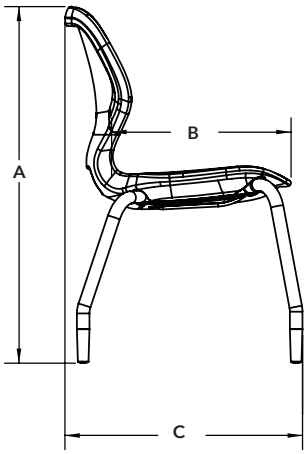

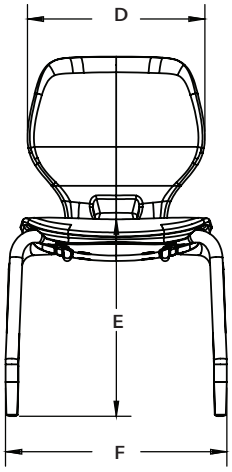

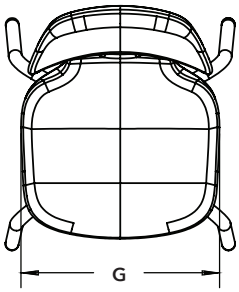

Smith System®
Specification Sheet

Numbers™ Seating

Numbers Stack Chair

MODEL#: 22847

Model # Shown: 22849

OVERVIEW

Numbers chair is a winning answer for creating inspirational classrooms around the world. The chair delivers impressive benefits that add up for students and schools – great value, quality and comfort in a compact, sleek design that appeals to all ages. This chair answers the need for value-driven, high-quality classroom solutions with international design appeal. Numbers' compact, sleek look suits all ages, and the product specifications comply with BIFMA, EN, & GB standards for durability, performance and sizing. (View Height Guide)

MATERIALS

The blow molded shell is polypropylene material that features a waterfall front seat pan to allow for comfort and 360-degree movement. The shell's top surface includes a subtle woven pattern that allows for better airflow. Also, featured are two handles: 1) low, through hole to easily move, stack or clean the chair and 2) a curled seatback ledge to grip and lift. The taller continuous seatback adds upper back support, with a rounded top edge that can double as an armrest. Cover plate on underside of shell is made of polypropylene with integrated TPE skids. The TPE skids are soft to better protect surfaces when stacked.

The frame is constructed of a strong 22mm x 14-gauge steel tube frame with a 14-gauge CRS mounting plate. Frame conceals into shell cavity for a slim appearance. All frames feature a durable platinum painted finish. Consists of nylon glides with an optional felt tip.

SHELL COLOR OPTIONS

APPLE, BLACK, CERULEAN, CHARCOAL, NAVY, PERSIAN BLUE

ADDITIONAL LEAD TIME SHELL COLOR OPTIONS

BLUEBERRY, BURGUNDY, FOREST GREEN, ORANGE, PLATINUM, PURPLE, RED, YELLOW

FRAME COLOR

PLATINUM

GLIDE OPTIONS

Nylon glide is standard
Felt glide option: add "F" to follow model#
(Set of 4 installed - upcharge for felt glide)
View Glide Guide

DIMENSIONS

Model	Description	A	B	C	D	E	F	G
22847	Numbers 14" Stack Chair (size 3)	24.9	12.4	16.4	12.1	13.7	15.1	13.1

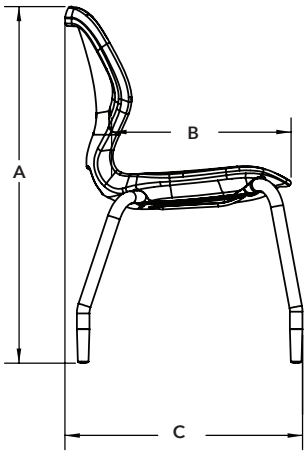

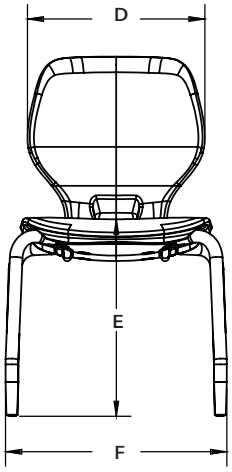

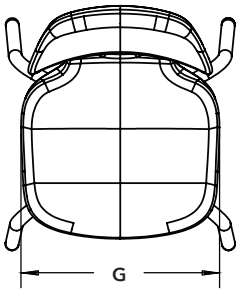

Smith System®
Specification Sheet

Numbers™ Seating

Numbers Stack Chair

MODEL#: 22839

Model # Shown: 22849

OVERVIEW

Numbers chair is a winning answer for creating inspirational classrooms around the world. The chair delivers impressive benefits that add up for students and schools – great value, quality and comfort in a compact, sleek design that appeals to all ages. This chair answers the need for value-driven, high-quality classroom solutions with international design appeal. Numbers' compact, sleek look suits all ages, and the product specifications comply with BIFMA, EN, & GB standards for durability, performance and sizing. (**View Height Guide**)

MATERIALS

The blow molded shell is polypropylene material that features a waterfall front seat pan to allow for comfort and 360-degree movement. The shell's top surface includes a subtle woven pattern that allows for better airflow. Also, featured are two handles: 1) low, through hole to easily move, stack or clean the chair and 2) a curled seatback ledge to grip and lift. The taller continuous seatback adds upper back support, with a rounded top edge that can double as an armrest. Cover plate on underside of shell is made of polypropylene with integrated TPE skids. The TPE skids are soft to better protect surfaces when stacked.

The frame is constructed of a strong 22mm x 14-gauge steel tube frame with a 14-gauge CRS mounting plate. Frame conceals into shell cavity for a slim appearance. All frames feature a durable platinum painted finish. Consists of nylon glides with an optional felt tip.

SHELL COLOR OPTIONS

APPLE, BLACK, CERULEAN, CHARCOAL, NAVY, PERSIAN BLUE

ADDITIONAL LEAD TIME SHELL COLOR OPTIONS

BLUEBERRY, BURGUNDY, FOREST GREEN, ORANGE, PLATINUM, PURPLE, RED, YELLOW

FRAME COLOR

PLATINUM

GLIDE OPTIONS

Nylon glide is standard
Felt glide option: add "F" to follow model#
(Set of 4 installed - upcharge for felt glide)
View Glide Guide

DIMENSIONS

Model	Description	A	B	C	D	E	F	G
22839	Numbers 15" Stack Chair (size 4)	27.6	14.3	18.7	13.9	14.8	16.9	15

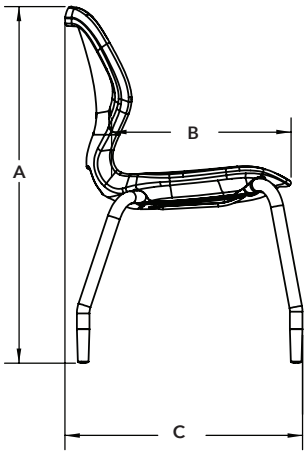

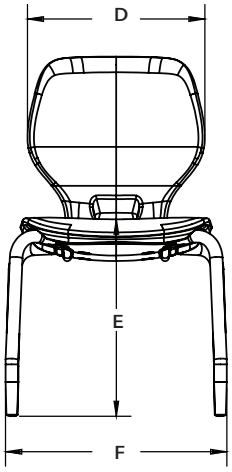

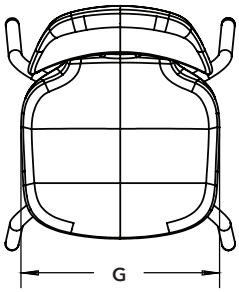

Smith System®
Specification Sheet

Numbers™ Seating

Numbers Stack Chair

MODEL#: 22848

Model # Shown: 22849

OVERVIEW

Numbers chair is a winning answer for creating inspirational classrooms around the world. The chair delivers impressive benefits that add up for students and schools – great value, quality and comfort in a compact, sleek design that appeals to all ages. This chair answers the need for value-driven, high-quality classroom solutions with international design appeal. Numbers' compact, sleek look suits all ages, and the product specifications comply with BIFMA, EN, & GB standards for durability, performance and sizing. (View Height Guide)

MATERIALS

The blow molded shell is polypropylene material that features a waterfall front seat pan to allow for comfort and 360-degree movement. The shell's top surface includes a subtle woven pattern that allows for better airflow. Also, featured are two handles: 1) low, through hole to easily move, stack or clean the chair and 2) a curled seatback ledge to grip and lift. The taller continuous seatback adds upper back support, with a rounded top edge that can double as an armrest. Cover plate on underside of shell is made of polypropylene with integrated TPE skids. The TPE skids are soft to better protect surfaces when stacked.

The frame is constructed of a strong 22mm x 14-gauge steel tube frame with a 14-gauge CRS mounting plate. Frame conceals into shell cavity for a slim appearance. All frames feature a durable platinum painted finish. Consists of nylon glides with an optional felt tip.

SHELL COLOR OPTIONS

APPLE, BLACK, CERULEAN, CHARCOAL, NAVY, PERSIAN BLUE

ADDITIONAL LEAD TIME SHELL COLOR OPTIONS

BLUEBERRY, BURGUNDY, FOREST GREEN, ORANGE, PLATINUM, PURPLE, RED, YELLOW

FRAME COLOR

PLATINUM

GLIDE OPTIONS

Nylon glide is standard
Felt glide option: add "F" to follow model#
(Set of 4 installed - upcharge for felt glide)
View Glide Guide

DIMENSIONS

Model	Description	A	B	C	D	E	F	G
22848	Numbers 16" Stack Chair (size 5)	29.7	14.3	18.7	13.9	16.8	16.9	15

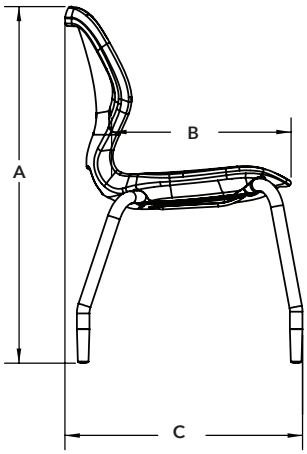

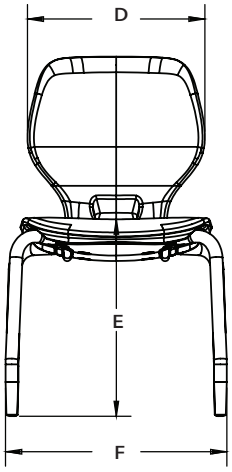

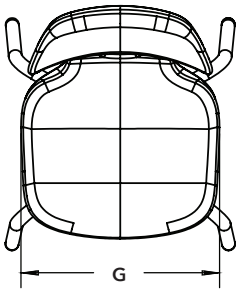

Smith System®
Specification Sheet

Numbers™ Seating

Numbers Stack Chair

MODEL#: 22849

OVERVIEW

Numbers chair is a winning answer for creating inspirational classrooms around the world. The chair delivers impressive benefits that add up for students and schools – great value, quality and comfort in a compact, sleek design that appeals to all ages. This chair answers the need for value-driven, high-quality classroom solutions with international design appeal. Numbers' compact, sleek look suits all ages, and the product specifications comply with BIFMA, EN, & GB standards for durability, performance and sizing. (View Height Guide)

MATERIALS

The blow molded shell is polypropylene material that features a waterfall front seat pan to allow for comfort and 360-degree movement. The shell's top surface includes a subtle woven pattern that allows for better airflow. Also, featured are two handles: 1) low, through hole to easily move, stack or clean the chair and 2) a curled seatback ledge to grip and lift. The taller continuous seatback adds upper back support, with a rounded top edge that can double as an armrest. Cover plate on underside of shell is made of polypropylene with integrated TPE skids. The TPE skids are soft to better protect surfaces when stacked.

The frame is constructed of a strong 22mm x 14-gauge steel tube frame with a 14-gauge CRS mounting plate. Frame conceals into shell cavity for a slim appearance. All frames feature a durable platinum painted finish. Consists of nylon glides with an optional felt tip.

SHELL COLOR OPTIONS

APPLE, BLACK, CERULEAN, CHARCOAL, NAVY, PERSIAN BLUE

ADDITIONAL LEAD TIME SHELL COLOR OPTIONS

BLUEBERRY, BURGUNDY, FOREST GREEN, ORANGE, PLATINUM, PURPLE, RED, YELLOW

FRAME COLOR

PLATINUM

GLIDE OPTIONS

Nylon glide is standard
Felt glide option: add "F" to follow model#
(Set of 4 installed - upcharge for felt glide)
View Glide Guide

DIMENSIONS
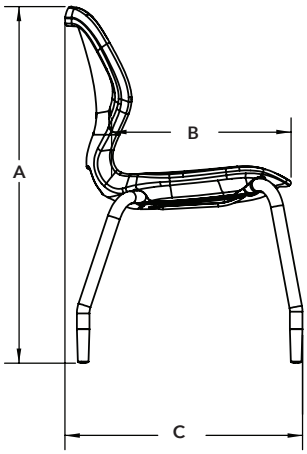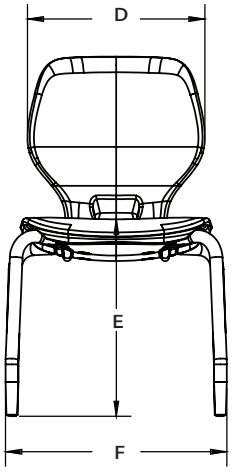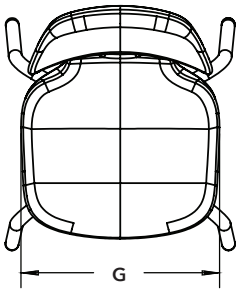
Model	Description	A	B	C	D	E	F	G
22849	Numbers 18" Stack Chair (size 6)	32.2	17.4	21.5	15.4	18	19	16.6