BB007-6

Small Bamboo Book Browser Cart

Assembly Guide

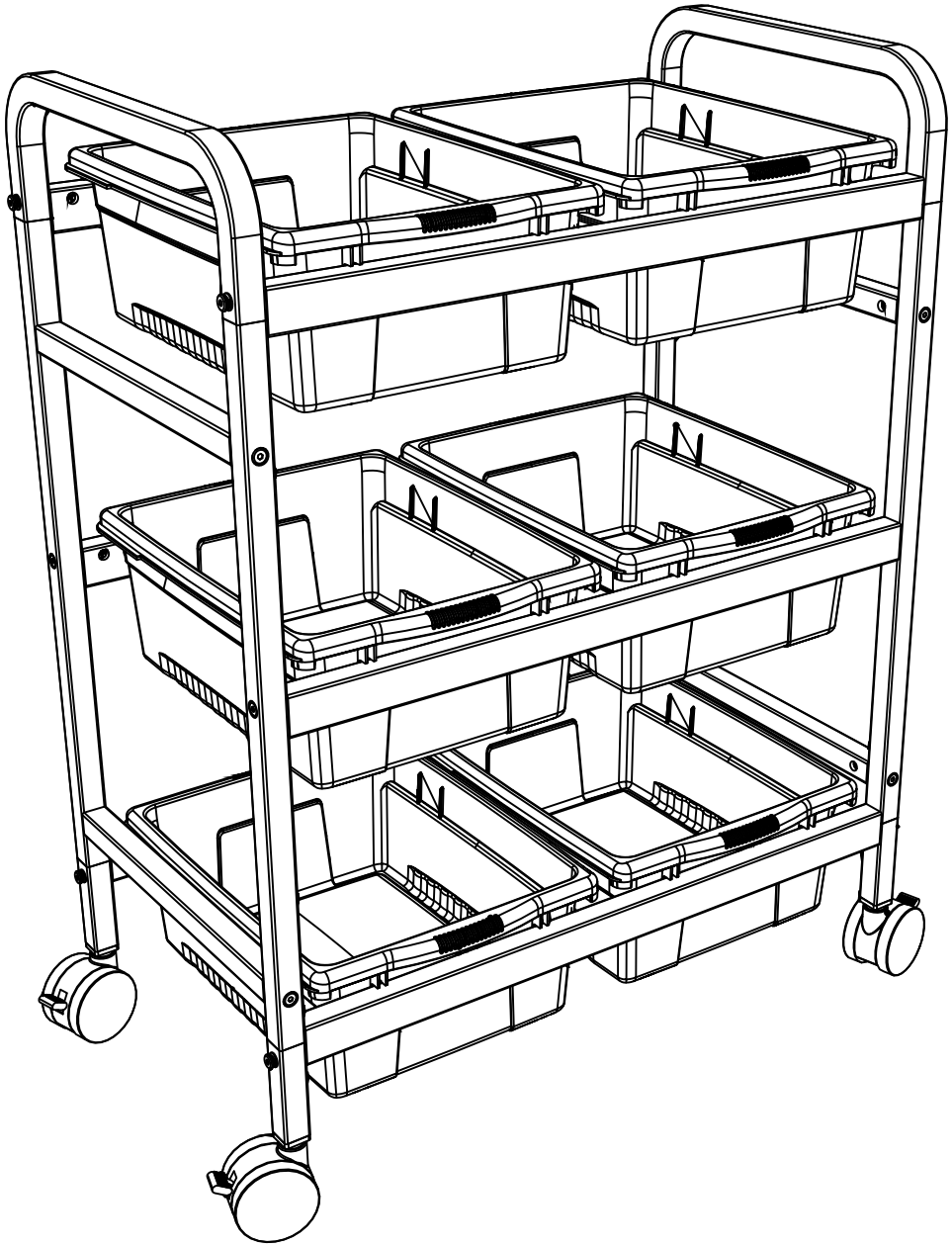

Please Recycle

Tips for Assembly

Before You Begin:
- Lay out and identify all of the included parts.
- The hardware has been packed according to step.
- Read the assembly guide over once to familiarize yourself with them.

As You Assemble the Unit:
- Follow the steps in sequence.
- Before beginning each step, find the part(s) that you need for that step.
- The title of each step states what you will be doing. Review the text and the pictures as you build the unit.

Watch for These Helpful Symbols:



2-Person Task

For safety, please have someone help you when working on steps displaying this symbol.

The symbol denotes a step needing extra attention to ensure it is done correctly.

Important Information! Warning!

Please read the warnings below for important safety information regarding your product. Failure to read these warnings or to follow the instructions below could result in personal injury or damage to your product that could void your warranty.



Small Parts

In its unassembled state, this product contains parts that can be hazardous to small children. This product should be assembled by an adult.



Adult Supervision

This product is to be used under the supervision of an adult.



No Maintenance

This product does **NOT** require maintenance. Repairs should only be performed by authorized personnel. Please contact customer service if repairs are required.



Climb Hazard

Do not climb on, hang from or suspend objects from any components of your product unless otherwise specified.



Indoor Use Only

This product is intended for indoor comercial use only. To reduce the risk of fire or electric shock, do not expose this product to rain or moisture. The internal components are not sealed from the environment.

Parts

Before beginning, you should have:

Additional tools required:

Rubber Mallet 1x 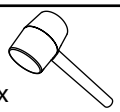 + Screwdriver ⊕

BB007-0

End Frame
2x

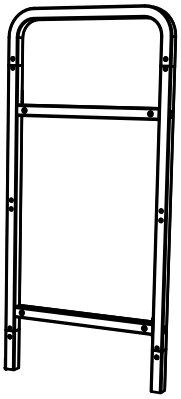

3" Locking Twin Wheel Caster
4x

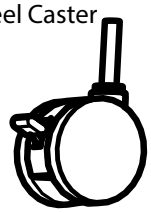

Stretcher
6x

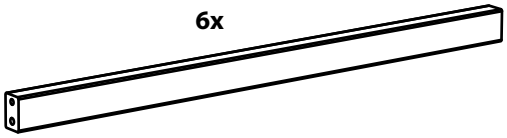

BB6-CB

Open Tub
6x
(CC4068)

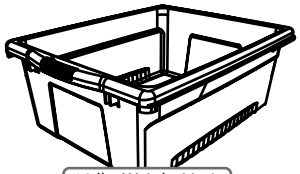

In Box 1

Hardware
Actual Size

Ⓐ M6 x 60mm
8x



Ⓑ M6 x 55mm
4x



Ⓒ Wooden Peg
12x

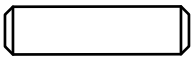

Ⓓ M6 Hammer Nut
12x

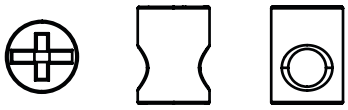

Ⓔ M6 Flat Washer
12x



Ⓕ M6 Lock Washer
12x



Tools
(Not to Scale)

Allen Key
(43281)
2x

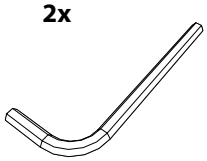

1

Actual Size:

C
6x

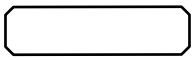

You will need: (Not to Scale)

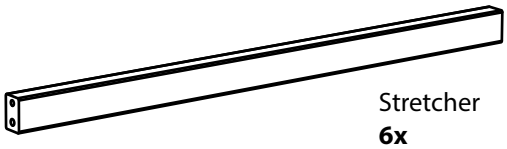

Stretcher
6x

Add wood pegs into one end of stretchers

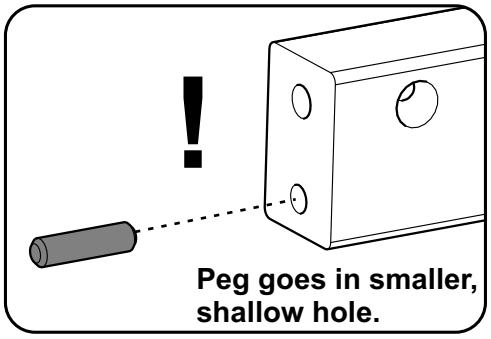

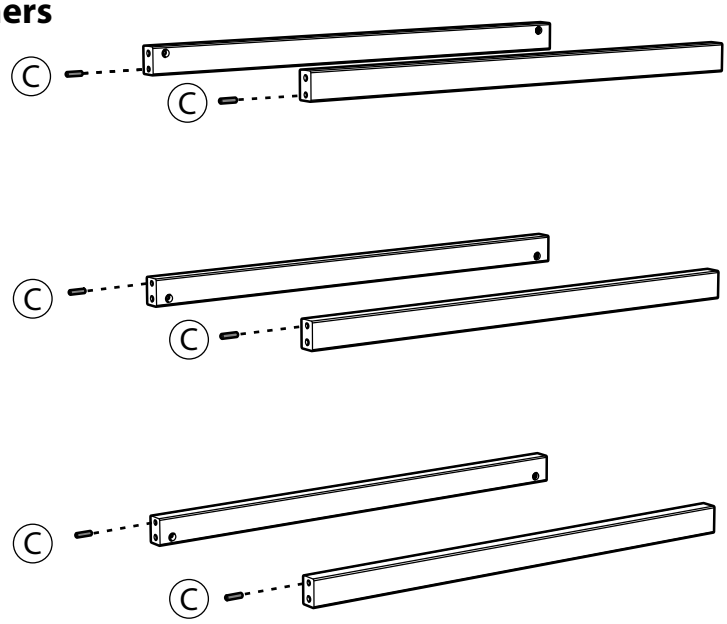

2

2-Person Task

Actual Size:

A
4x



D
6x



E
6x



B
2x



F
6x



You will need: (Not to Scale)

Allen Key
(43281)
2x

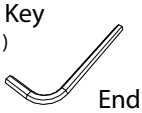

End Frame
1x



Screwdriver



Add side frame with hardware

Assembly through metal tube on side frame:

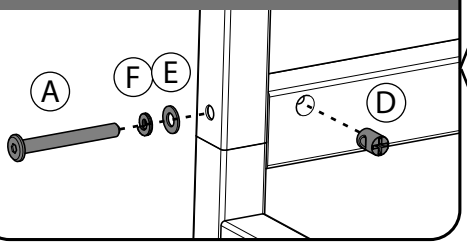

! Note orientation of hammer nut hole on stretcher

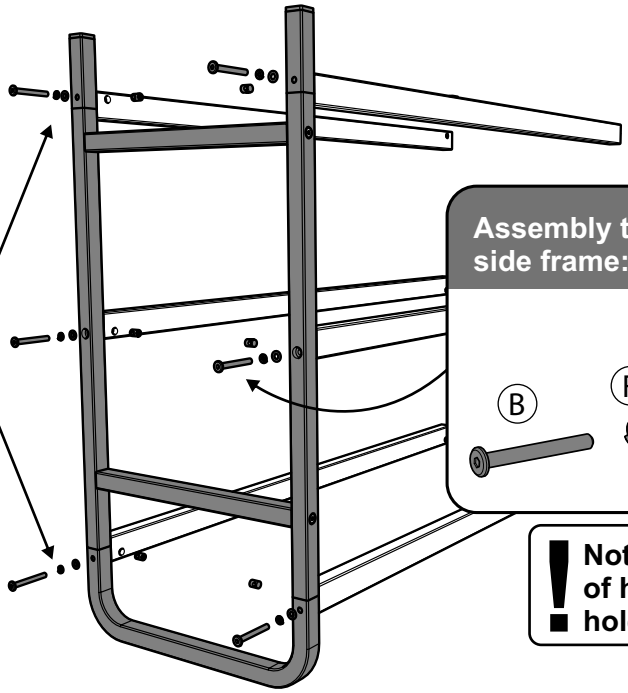

Assembly through bamboo on side frame:

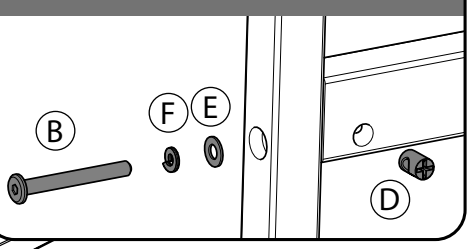

! Note orientation of hammer nut hole on stretcher

3

Actual Size:

Ⓒ
6x

Add wood pegs into other end of stretchers

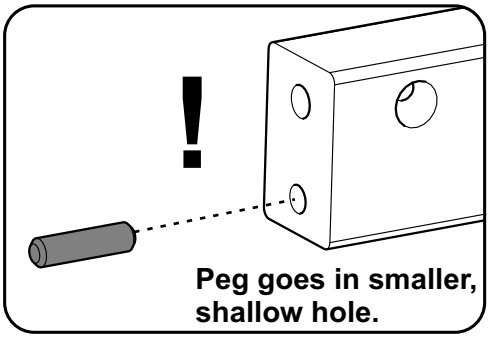

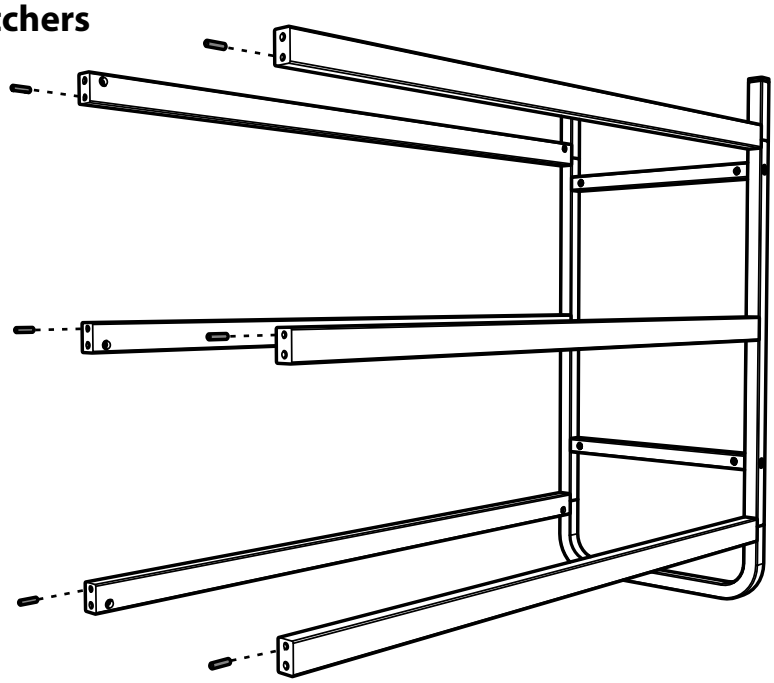

4

2-Person Task

Actual Size:

Ⓐ **4x**



Ⓓ **6x**



Ⓔ **6x**



Ⓑ **2x**



Ⓕ **6x**



You will need: (Not to Scale)

Allen Key
(43281)
2x

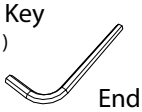

End Frame
1x

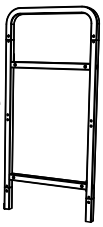

Screwdriver
⊕

Add second side frame with hardware

Assembly through metal tube on side frame:

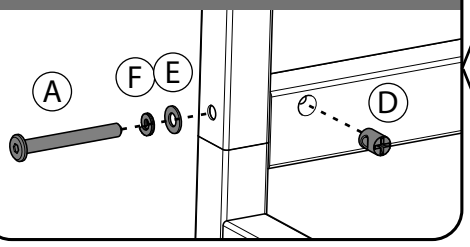

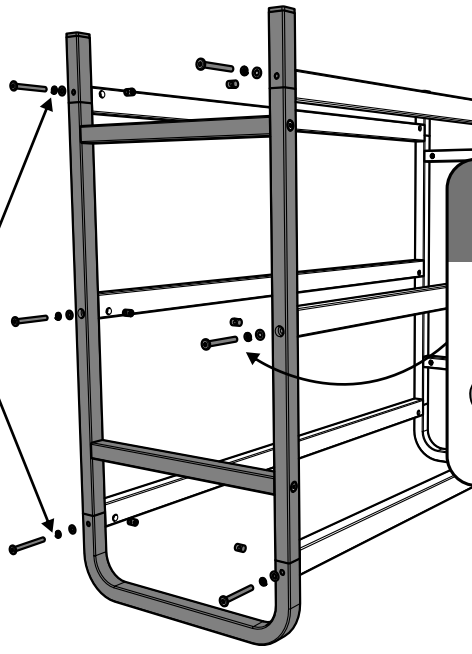

Assembly through bamboo on side frame:

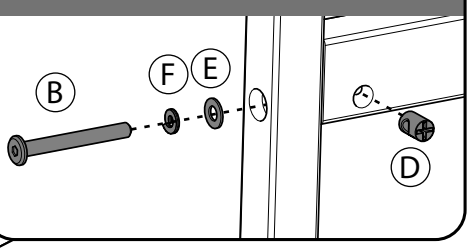

5

You will need: (Not to Scale)

3" Locking Twin Wheel Caster
4x



Rubber Mallet 1x



Insert casters into bottom of side frames

> **!** Press Casters firmly into the Base:
>
> Casters will click into place
> If necessary, tap the caster in using a rubber mallet.

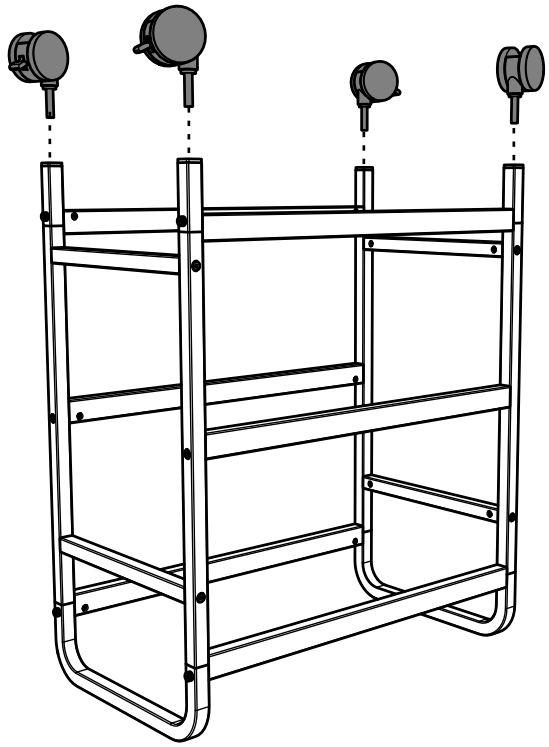

6

You will need: (Not to Scale)

Open Tub
6x

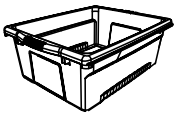

Check entire assembly for loose parts and fasteners. Add tubs.

